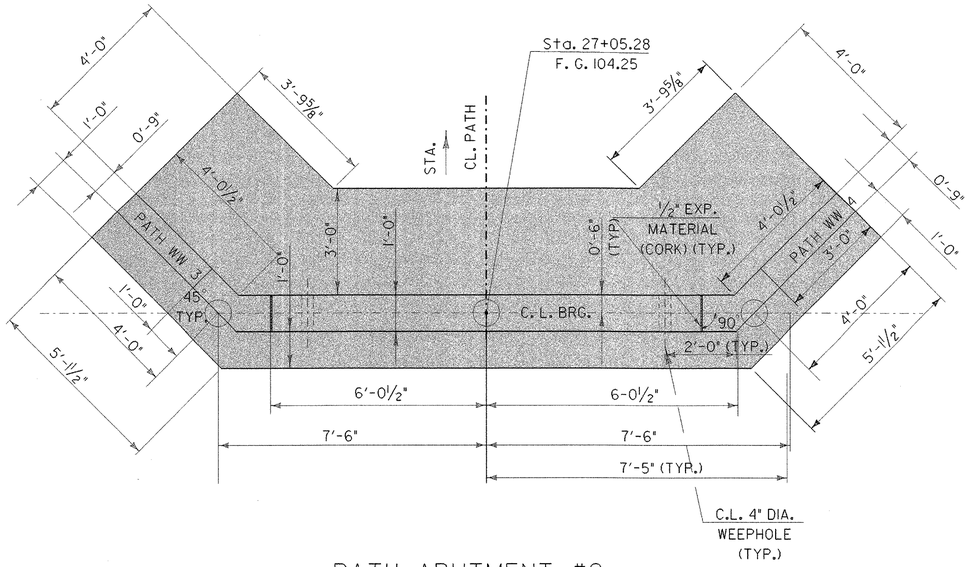


PATH ABUTMENT #2
PLAN

SCALE ½" = 1'-0

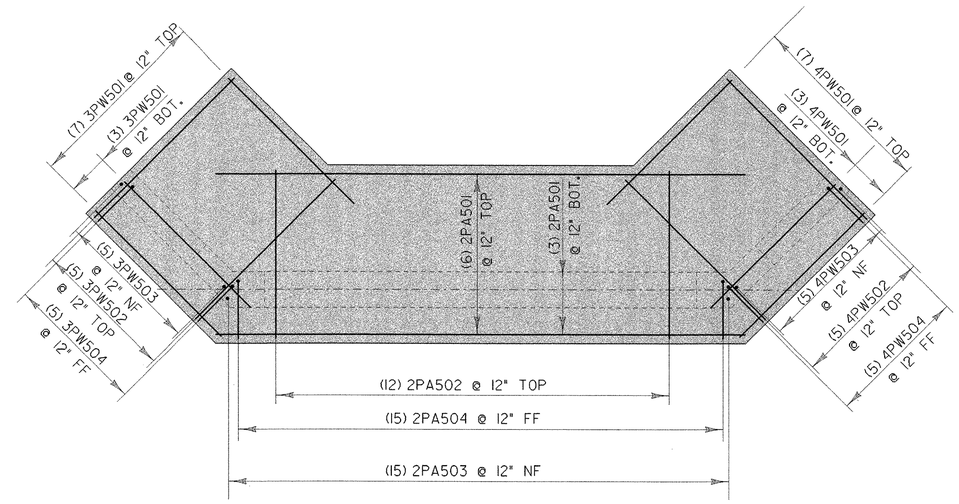


PATH ABUTMENT #2
FOOTING REINFORCING

SCALE ½" = 1'-0

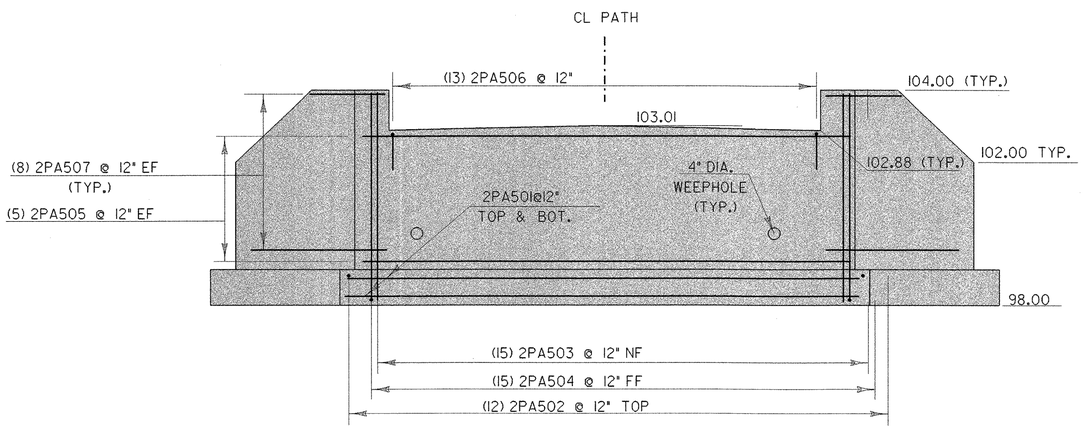


PATH ABUTMENT #2
ELEVATION

SCALE ½" = 1'-0

NOTE:

NF = NEAR FACE
FF = FAR FACE
EF = EACH FACE
▲ = CUT TO FIT IN FIELD
3" CLR. UNLESS OTHERWISE SPECIFIED ON THE PLANS.

STATE OF VERMONT
AGENCY OF TRANSPORTATION

| | |
|---|---|
| Town Of COLCHESTER | Bridge No. sf132pa2J |
| Highway No. BIKE PATH | Log Sta. / Surv. Sta. |
| PATH ABUTMENT #2 (STA 27+05) | |
| LAYOUT AND REINFORCING | |
| Designed By M.EVANS-MONGEON | Drawn By M.EVANS-MONGEON |
| Checked By Date | Bridge Design Supervisor C.S.KELLER Date |
| PROJECT COLCHESTER | PROJECT NO. STP BIKE(48) |
| I.G.O.\\radiocadd\filingcabinet$\03f038\Structures\sf038bdr.dgn | sf132pa2J |
| Bridge Sheet No. | Sheet 67 of 87 |

PLOTTED 05-AUG-2003